D

THIS DRAWING AND DESIGN HEREON CONSTITUTES A PROPRIETARY DESIGN OF PACKARD ELECTRIC DIVISION AND IS NOT TO BE DUPLICATED OR REPRODUCED WITHOUT AUTHORITY OF PACKARD ELECTRIC DIVISION.

DO NOT SCALE

DATE	SYM	REVISION RECORD	AUTHORITY	DR	CK
22OC90	A1	REDRAWN & REVISED WITH NO			
		PHYSICAL CHANGE	137273	BAR	BAR
1OJL91	A2	37.1 REF WAS 36.7 REF &			
		40.5 REF WAS 40.3 REF	143246	JK	

PART NO. 1201 5797

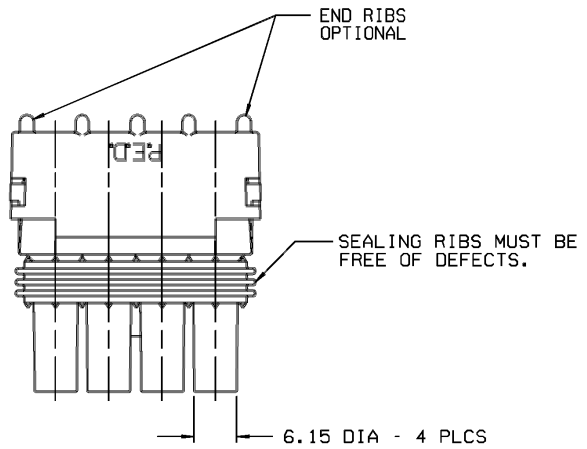

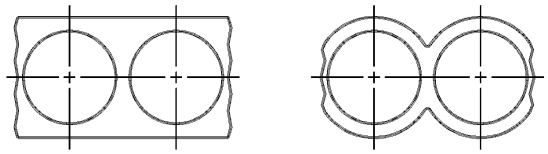

STANDARD CONSTRUCTION

OPTIONAL CONSTRUCTION

CABLE END VIEW OF CONN BODY

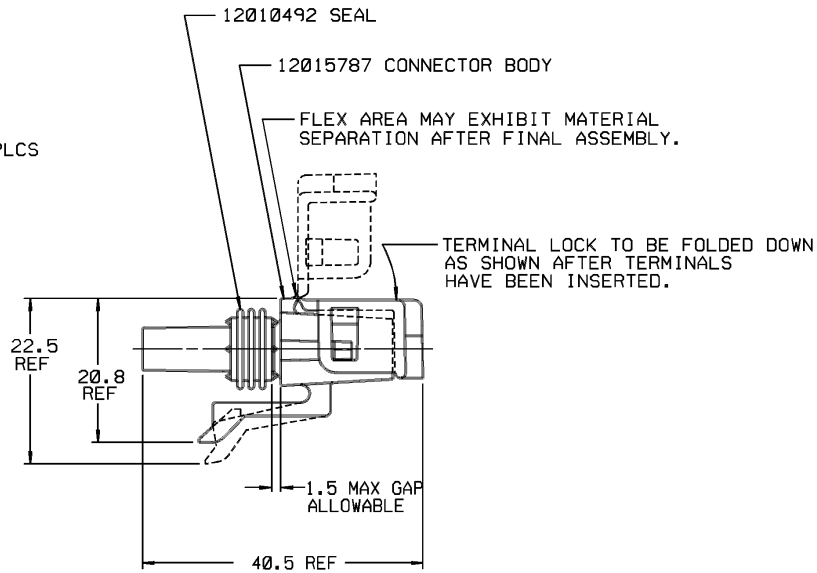

A2

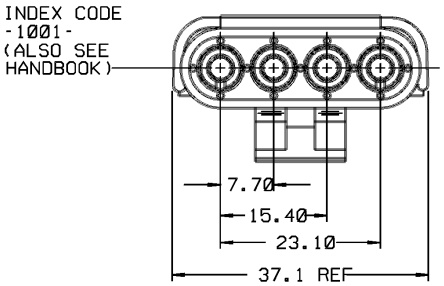

A2

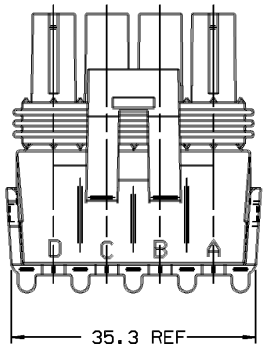

NOTES —

1. USE FEMALE TERMINAL 12089188 OR EQUIVALENT FOR 'IN-LINE' APPLICATIONS.
2. USE CABLE SEAL 12015323 OR EQUIVALENT.
3. MATING CONNECTOR 12010974 OR EQUIVALENT.
4. WHEN PARTS ARE SHIPPED, THEY MUST BE PACKED IN PLASTIC BAGS OR SHIPPING CONTAINERS MUST BE LINED WITH PLASTIC LINERS. BAGS OR LINERS MUST BE SEALED TO AVOID ENTRY OF FOREIGN MATTER.
5. SEALING CODE 3.
6. WHEN DESIGNING A PART TO MATE TO THIS WEATHER PACK CONNECTOR, REQUEST THE LATEST COPY OF DRAWING NUMBER 12020084 FROM THE PACKARD ELECTRIC DIVISION.

PACKARD ELECTRIC DIVISION
GENERAL MOTORS CORPORATION
WARREN, OHIO

36V
38A
98
101-V
122V
197A
4274A
4300A
4400A
4471A
C/N NISSAN

PED / INTERGRAPH MICROSTATION

FILE SPEC: ****USER**** DGN*SPECIFICATION********** *****SYTIME******

THIRD ANGLE PROJECTION

METRIC
DIMENSIONS ARE IN MILLIMETERS UNLESS OTHERWISE SPECIFIED.

CODE NO. 6900

Q.C. -C-5110

TOLERANCE UNLESS OTHERWISE SPECIFIED
DECIMAL: ONE PLACE ± 0.3 TWO PLACE ± 0.15
ANGULAR ±2°

DWG. DATE 05MY80 SCALE NONE

DR. JOYCE E. HEBBERTS 05MY80

EST. NO.

CK. T. MUDREY DATE 06MY80

REFERENCE NO.

APPR. JOHN A. YURTIN DATE 07MY80

APPR. ART WINYARD DATE 07MY80

MATERIAL SPEC. SEE DRAWING

NAME ASM CONN 4F W/P TWR

PART NO. 1201 5797

SIZE C

PACKARD ELECTRIC