TABLE 1

YAZAKI SUB ASSEMBLY PART NO.	NO.	YAZAKI PART NO.	MATERIAL	COLOR	QTY.
7282-4424 ETC.	①	SEE TABLE 2	HPA	SEE TABLE 2	1
	②	7158-4930	HPA	NATURAL	1

TABLE 2

YAZAKI SUB ASSEMBLY PART NO.	YAZAKI PART NO.	COLOR
7282-4424,Ⓐ	7182-4424	NATURAL
7282-4424-10,Ⓐ	7182-4424-10	DARK GRAY
7282-4424-30,Ⓐ	7182-4424-30	BLACK
7282-4424-40,Ⓐ	7182-4424-40	LIGHT GRAY
7282-4424-50,Ⓐ	7182-4424-50	ORANGE
7282-4424-60,Ⓐ	7182-4424-60	GREEN
7282-4424-80,Ⓐ	7182-4424-80	BROWN
7282-4424-90,Ⓐ	7182-4424-90	BLUE

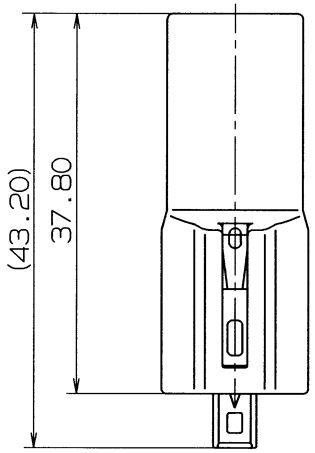

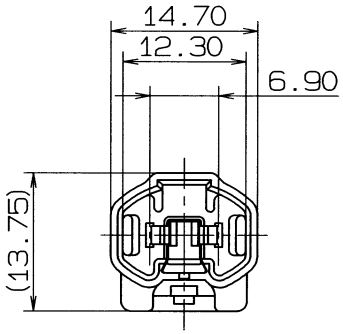

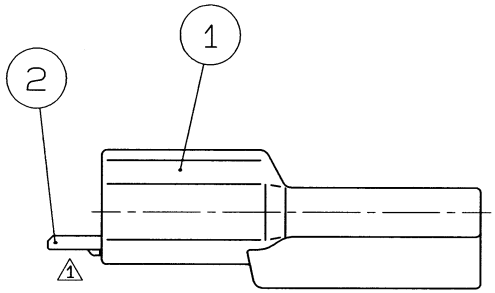

注 記

1. 嵌合相手品番 : 7283-8123 ETC.
2. 適用端子品番 : 7114-4020 ETC.

NOTES

1. MATING PART NO.: 7283-8123 ETC.
2. APPLICABLE TERMINAL NO.: 7114-4020 ETC.

ISSUE MARK

LET	DATE	REVISION RECORD	NO.	CHKD
1	97.02.20	CHANGED FORM,Ⓐ	C97-L354	H.K
	96.04.15	NEW	C96-L674	H.K

GENERAL TOLERANCE

	10MAX	50MAX	100MAX	250MAX	2500VR	ANGLE	ECCENT
A	±0.15	±0.2	±0.3	±0.5	±0.75	±30'	0.1
B	±0.2	±0.3	±0.55	±0.95	±1.4	±30'	0.1
©	±0.3	±0.5	±0.8	±1.4	±2	±30'	0.15

SPECIFIED

MASS g

CUSTOMER

CUSTOMER PART NO. | CUSTOMER DWG NO.

OFFICE | TRIAL PART NO.

VENDOR

VENDOR NO.

DWG TYPE	DWG SOURCE	DWG DATE	UNIT	SCL	ANGLE
R	NEW	96.04.15	mm	2/1	3

APPROVED	CHECKED	CHECKED	DESIGN	DRAWN
97.02.27		97.02.26	T.MIWA 96.03.14	R.SASAKI 97.02.20

MATL. SPEC. SEE TABLE 1 | TREAT. & FIN.

NAME 090 II 2P CONNECTOR HOUSING MALE SUB ASSEMBLY

PART NO. / CH. CODE 7282-4424 ETC.

DWG NO. 7282-4424: R | SET DWG NO.

YAZAKI CORPORATION