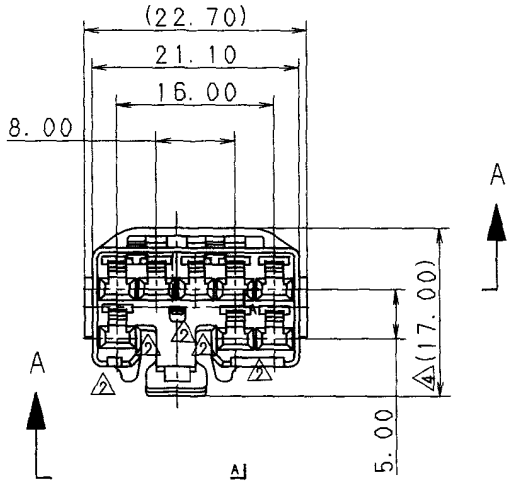

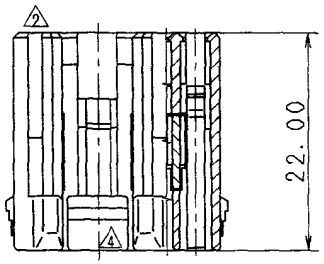

SEC. A-A

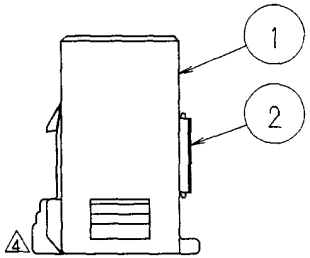

TABLE 1

SUB ASSEMBLY PART NO. AND CH. CODE	NO.	PART NO. AND CH. CODE	MATERIAL	COLOR	④QTY.
③7283-1080 ETC.	①	SEE TABLE 2	④HPA	SEE TABLE 2	1
	②	7157-4023 ④(7B57-4023)	④HPA	NATURAL	1

TABLE 2

SUB ASSEMBLY PART NO. AND CH. CODE	PART NO. AND CH. CODE	COLOR
7283-1080, B ④(7C83-1080)	7183-1080 ④(7B83-1080)	NATURAL
7283-1080-10, B	7183-1080-10	DARK GRAY
7283-1080-30, B	7183-1080-30	BLACK
7283-1080-40, B	7183-1080-40	LIGHT GRAY
7283-1080-50, B	7183-1080-50	ORANGE
①7283-1080-60, B	7183-1080-60	GREEN
④7283-1080-80, B	7183-1080-80	BROWN
7283-1080-90, B ⑤(7C83-1080-90)	7183-1080-90 ⑤(7B83-1080-90)	BLUE

注記

1. 嵌合相手品番：7282-1080 ETC.
2. 適用端子品番：7116-4020 ETC.
④ 3. ( ) 内品番は、エアバッグ (A/B) 回路及び特別管理回路に使用すること。

NOTES

1. MATING PART NO. :7282-1080 ETC.
2. APPLICABLE TERMINAL NO. :7116-4020 ETC.
④ 3. PART NUMBERS IN PARENTHESIS SHALL BE UESD FOR AIR BAG (A/B) CIRCUITS AND OHTER CIRCUITS DESIGNATED FOR SPECIAL MONITORING.

LET	DATE	REVISION RECORD	NO.	CHKD
⑤	00.06.12	ADDED A/B PART NO.	C00-L820	H. T
④	97.06.11	CHANGED FORM. MATERIAL & ADDED PART NO., B	C97-M040	H. K
③	90.11.10	CHANGED SPACER COLOR	C90-M205	M. H
②	90.04.04	CHANGED FORM	C90-L365	K. O
①	89.09.14	ADDED PART NO.	C89-L977	M. H
	88.12.24	NEW	C89-L008	K. J

ISSUE MARK

GENERAL TOLERANCE

	10MAX	50MAX	100MAX	250MAX	250OVR	ANGLE	ECCENT
A	±0.15	±0.2	±0.3	±0.5	±0.75	±30'	0.1
B	±0.2	±0.3	±0.55	±0.95	±1.4	±30'	0.1
Ⓒ	±0.3	±0.5	±0.8	±1.4	±2	±30'	0.15

SPECIFIED

MASS g

CUSTOMER
CUSTOMER PART NO.
CUSTOMER DWG NO.
OFFICE
TRIAL PART NO.
VENDOR
VENDOR NO.

DWG TYPE	DWG SOURCE	DWG DATE	UNIT	SCL	ANGLE
R	NEW	89.01.17	mm	④2/1	3

APPROVED	CHECKED	CHECKED	DESIGN	DRAWN
加藤	山梨	渥	Y. OHTA	Y. HATORI 田中ひ
'00.06.21	00.06.20	'00.06.16	87.09.11	00.06.12

MATL. SPEC. SEE TABLE 1
TREAT. & FIN.

NAME 090II 8P CONNECTOR SUB ASSEMBLY FEMALE

PART NO. CH. CODE ⑤7283-1080 ETC. (7C83-1080 ETC.)

DWG NO. 7283-1080:R
SET DWG NO.

YAZAKI CORPORATION