TABLE 1

SUB ASSEMBLY PART NO. AND CH. CODE	NO.	PART NO. AND CH. CODE	MATERIAL	COLOR	QTY.
7283-1305 ETC.	1	SEE TABLE 2	HPA	SEE TABLE 2	1
	2	7158-4547	HPA	NATURAL	1

TABLE 2

	SUB ASSEMBLY PART NO. AND CH. CODE	PART NO. AND CH. CODE	COLOR
	7283-1305, A	7183-1305	NATURAL
1	7283-1305-10, A	7183-1305-10	DARK GRAY
	7283-1305-40, A	7183-1305-40	LIGHT GRAY
1	7283-1305-50, A	7183-1305-50	ORANGE
1	7283-1305-51, A	7183-1305-51	SAE ORANGE
1	7283-1305-60, A	7183-1305-60	GREEN
	7283-1305-90, A	7183-1305-90	BLUE

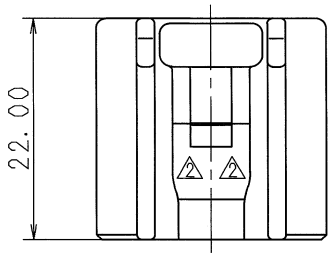

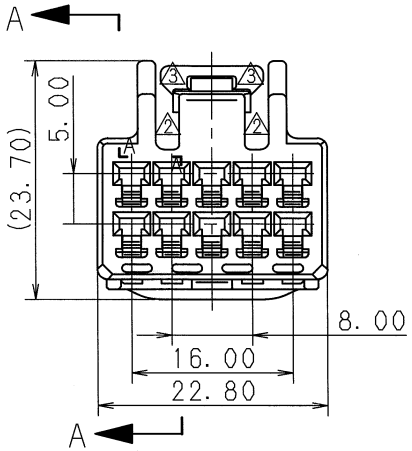

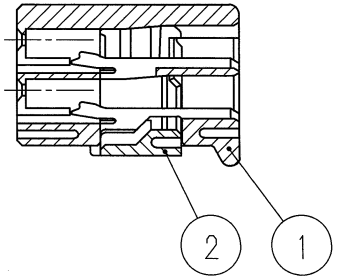

SEC. A-A

NOTES

1. MATING PART NO. : 7282-1305 ETC.
2. APPLICABLE TERMINAL NO. : 7116-4020 ETC.

注 記

1. 嵌合相手品番: 7282-1305 ETC.
2. 適用端子品番: 7116-4020 ETC.

ISSUE MARK

LET	DATE	REVISION RECORD	NO.	CHKD
3	01.02.20	CHANGED FORM	C01-X185	N.T
2	00.12.20	CHANGED FORM, A	C00-M621	T.Y
1	99.05.28	ADDED COLOR NO.	C99-L793	T.M
	98.05.29	NEW	C98-L954	T.M

GENERAL TOLERANCE

	10MAX	50MAX	100MAX	250MAX	2500VR	ANGLE	ECCENT
A	±0.15	±0.2	±0.3	±0.5	±0.75	±30′	0.1
B	±0.2	±0.3	±0.55	±0.95	±1.4	±30′	0.1
C	±0.3	±0.5	±0.8	±1.4	±2	±30′	0.15

SPECIFIED

MASS g

CUSTOMER

CUSTOMER PART NO.

CUSTOMER DWG NO.

OFFICE

TRIAL PART NO.

VENDOR

VENDOR NO.

DWG TYPE	DWG SOURCE	DWG DATE	UNIT	SCL	ANGLE
R	NEW	98.05.29	mm	2/1	3

APPROVED	CHECKED	CHECKED	DESIGN	DRAWN
	小梨	周	TANISHITA	ISHIJIMA 藤本
	01.03.14	01.03.08	97.08.28	01.02.20

MATL. SPEC. SEE TABLE 1

TREAT. & FIN.

NAME 090II 10P CONNECTOR HOUSING FEMALE SUB ASSEMBLY

PART NO. CH. CODE 7283-1305 ETC.

DWG NO. 7283-1305:R

SET DWG NO.

YAZAKI CORPORATION