YAZAKI SUB ASS'Y NO.	NO.	YAZAKI PART NO.	MATERIAL	COLOR	QTY.
7283-8721-30, A	1	7183-8721-30, A	PBT	BLACK	2 1
	2	7137-2612-80	SILICONE RUBBER	RED-IRON	2 1

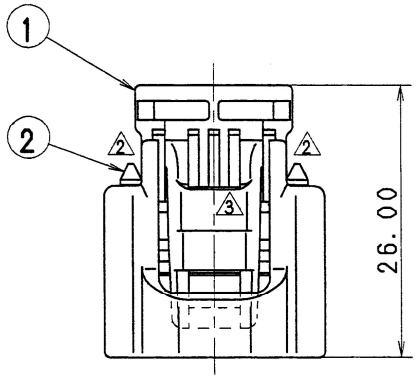

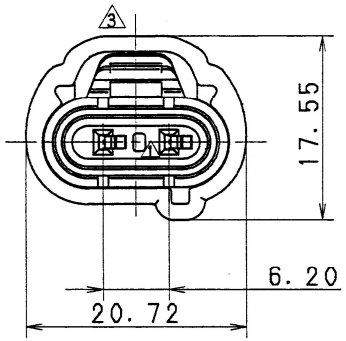

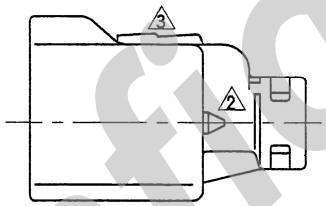

NOTES

3 1) APPLICABLE TERMINAL NO. : 7116-1680-02, 7116-1680-08
2) MATING PART NO. : 7182-8721-30
3) APPLICABLE REAR HOLDER NO. : 7157-4602-80
4) APPLICABLE SEAL RUBBER NO. : 7157-3950-80, 7157-3951-60
4 5) APPLICABLE PLUGGING RUBBER STOPPER NO. : 7157-3952-80

注 記

3 1) 適用ターミナル品番： 7116-1680-02, 7116-1680-08
2) 嵌合相手品番： 7182-8721-30
3) 適用リアホルダ品番： 7157-4602-80
4) 適用ゴム栓品番： 7157-3950-80, 7157-3951-60
4 5) 適用プラグ栓品番： 7157-3952-80

Confidential

LET	DATE	REVISION RECORD	NO.	CHKD
4	95.07.11	CHANGED NOTES	C95-M042	A.H
3	95.03.03	CHANGED FORM, A	C95-L389	K.S
2	92.03.02	CHANGED FORM	C92-L138	I.K
1	91.08.28	CHANGED FORM&RENEW	C91-7234	S.I
	91.04.03	NEW	C91-L225	S.I

GENERAL TOLERANCE

	10MAX	50MAX	100MAX	250MAX	2500VR	ANGLE	ECCENT
A	±0.15	±0.2	±0.3	±0.5	±0.75	±30'	0.1
B	±0.2	±0.3	±0.55	±0.95	±1.4	±30'	0.1
C	±0.3	±0.5	±0.8	±1.4	±2	±30'	0.15

SPECIFIED

MASS g

CUSTOMER
CUSTOMER PART NO.
CUSTOMER DWG NO.
OFFICE
TRIAL PART NO.
VENDOR
VENDOR NO.

DWG TYPE	DWG SOURCE	DWG DATE	UNIT	SCL	ANGLE
R	NEW	91.04.03	mm	3 2/1	3

APPROVED	CHECKED	CHECKED	DESIGN	DRAWN
95.07.18	95.07.14	95.07.14	K. OHTAKA 90.12.25	K. SUZUKI 95.07.11

ISSUE MARK

MATL. SPEC. SEE TABLE
TREAT. & FIN.

NAME SSD CONNECTOR HOUSING
2P-B FEMALE SUB ASS'Y

PART NO. / CH. CODE 7283-8721-30, A

DWG NO. 7283-8721-30:R

YAZAKI CORPORATION