THIS DRAWING IS UNPUBLISHED. RELEASED FOR PUBLICATION 2005
© COPYRIGHT 2004 BY - ALL RIGHTS RESERVED.

LOC	DIST
FM	-

REVISIONS

P	LTR	DESCRIPTION	DATE	DWN	APVD
	F8	NEW VERSION ADDED	03MAY2019	SZN	LSZ
	F9	LASER PRINT UPDATED WITH CN LOCATION	06AUG2019	SZN	LSZ
	F10	BOTTOM VIEW ADDED FOR CODING D	25MAR2020	SZN	LSZ
	F11	NEW PN ADDED - 2-1718644-6	25NOV2024	SZN	LSZ

PRINT: (1)
5:1

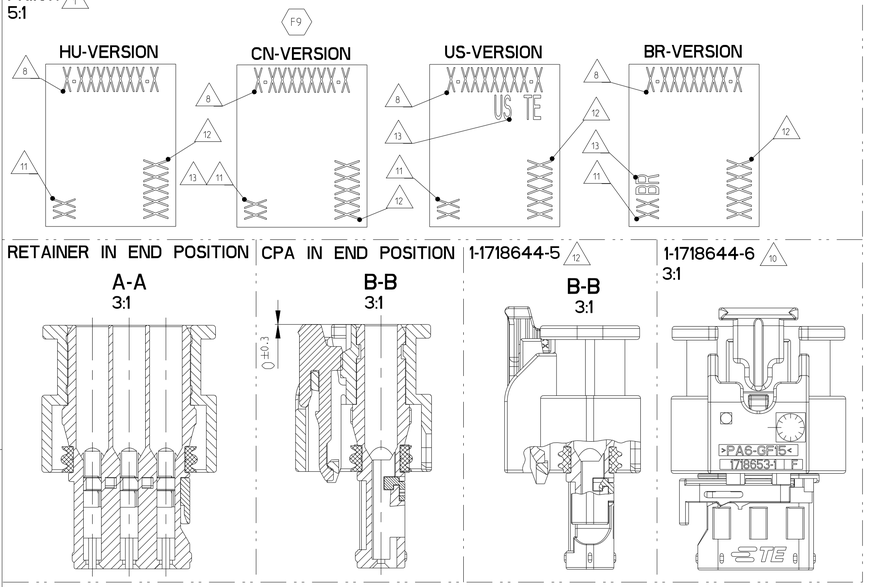

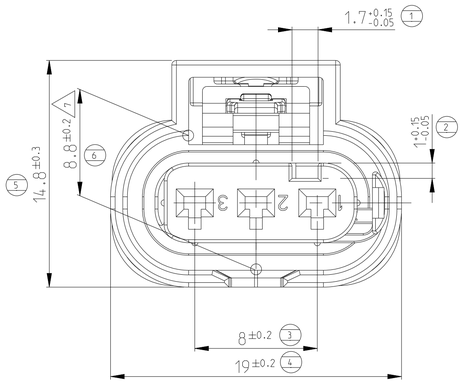

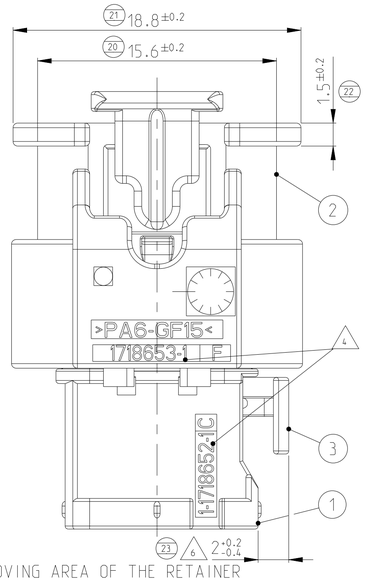

MOVING AREA OF THE RETAINER

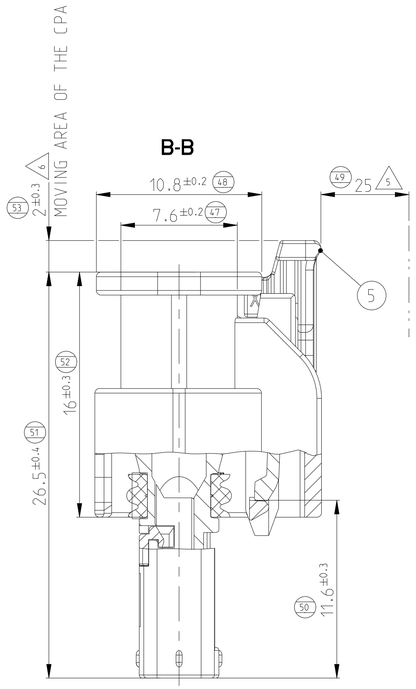

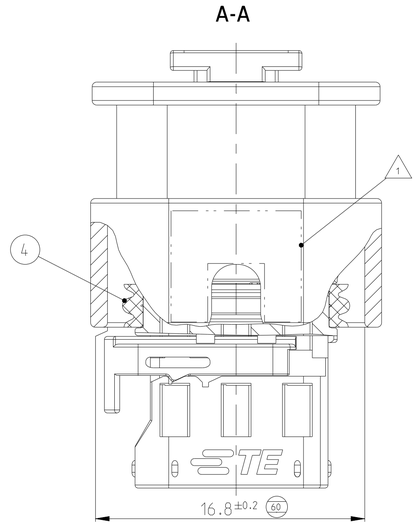

TE-ORDER NO. (8)	COD	DESCRIPTION	REV	QTY	DESCRIPTION	MATERIAL	SURFACE/COLOUR	ITEM	VAR
2-1718644-6 (F11)	B	3pos. MCON 1.2 - LL Connector Sealed	F	1	MCON 1.2 - CPA	PA46-GF15	GRAY SIML. RAL 7037		III (10)
				1	3pos. MCON 1.2 - Seal	MVQ	NATURE		
				1	3pos. MCON 1.2 - Retainer	PA66-GF15	VIOLETT SIML. RAL 4006		
				1	3pos. MCON 1.2 - Protection Cover	PA6-GF15	BLACK SIML. RAL 9011		
				1	3pos. MCON 1.2 - Recepticle Hsg.	PA66-GF30	NATURE		
1-1718644-6 (F8)	A	3pos. MCON 1.2 - LL Connector Sealed	F	1	MCON 1.2 - CPA	PA46-GF15	GRAY SIML. RAL 7037	5	
				1	3pos. MCON 1.2 - Seal	MVQ	NATURE	4	
				1	3pos. MCON 1.2 - Retainer	PA66-GF15	VIOLETT SIML. RAL 4006	3	
				1	3pos. MCON 1.2 - Protection Cover	PA6-GF15	BLACK SIML. RAL 9011	2	
				1	3pos. MCON 1.2 - Recepticle Hsg.	PA66-GF30	BLACK SIML. RAL 9011	1	
2-1718644-5	B	3pos. MCON 1.2 - LL Connector Sealed	A	1	MCON 1.2 - CPA	PA46-GF15	GRAY SIML. RAL 7037	5	II (9)
				1	3pos. MCON 1.2 - Seal	MVQ	GREEN	4	
				1	3pos. MCON 1.2 - Retainer	PA66-GF15	VIOLETT SIML. RAL 4006	3	
				1	3pos. MCON 1.2 - Protection Cover	PA46	BLACK SIML. RAL 9011	2	
				1	3pos. MCON 1.2 - Recepticle Hsg.	PA66-GF30	NATURE	1	
1-1718644-5	A	3pos. MCON 1.2 - LL Connector Sealed	D	1	MCON 1.2 - CPA	PA46-GF15	GRAY SIML. RAL 7037	5	
				1	3pos. MCON 1.2 - Seal	MVQ	GREEN	4	
				1	3pos. MCON 1.2 - Retainer	PA66-GF15	VIOLETT SIML. RAL 4006	3	
				1	3pos. MCON 1.2 - Protection Cover	PA46	BLACK SIML. RAL 9011	2	
				1	3pos. MCON 1.2 - Recepticle Hsg.	PA66-GF30	BLACK SIML. RAL 9011	1	
4-1718644-1	D	3pos. MCON 1.2 - LL Connector Sealed	A	1	MCON 1.2 - CPA	PA46-GF15	GRAYSIML. RAL 7037	5	I
				1	3pos. MCON 1.2 - Seal	MVQ	NATURE	4	
				1	3pos. MCON 1.2 - Retainer	PA66-GF15	VIOLETT SIML. RAL 4006	3	
				1	3pos. MCON 1.2 - Protection Cover	PA6-GF15	BLACK SIML. RAL 9011	2	
				1	3pos. MCON 1.2 - Recepticle Hsg.	PA66-GF30	VIOLETT SIML. RAL 4006	1	
(F8) 3-1718644-1	C	3pos. MCON 1.2 - LL Connector Sealed	F	1	MCON 1.2 - CPA	PA46-GF15	GRAY SIML. RAL 7037	5	
				1	3pos. MCON 1.2 - Seal	MVQ	NATURE	4	
				1	3pos. MCON 1.2 - Retainer	PA66-GF15	VIOLETT SIML. RAL 4006	3	
				1	3pos. MCON 1.2 - Protection Cover	PA6-GF15	BLACK SIML. RAL 9011	2	
				1	3pos. MCON 1.2 - Recepticle Hsg.	PA66-GF30	BLUE SIML. RAL 5012	1	
2-1718644-1	B	3pos. MCON 1.2 - LL Connector Sealed	F	1	MCON 1.2 - CPA	PA46-GF15	GRAY SIML. RAL 7037	5	
				1	3pos. MCON 1.2 - Seal	MVQ	NATURE	4	
				1	3pos. MCON 1.2 - Retainer	PA66-GF15	VIOLETT SIML. RAL 4006	3	
				1	3pos. MCON 1.2 - Protection Cover	PA6-GF15	BLACK SIML. RAL 9011	2	
				1	3pos. MCON 1.2 - Recepticle Hsg.	PA66-GF30	NATURE	1	
1-1718644-1	A	3pos. MCON 1.2 - LL Connector Sealed	F	1	MCON 1.2 - CPA	PA46-GF15	GRAY SIML. RAL 7037	5	
				1	3pos. MCON 1.2 - Seal	MVQ	NATURE	4	
				1	3pos. MCON 1.2 - Retainer	PA66-GF15	VIOLETT SIML. RAL 4006	3	
				1	3pos. MCON 1.2 - Protection Cover	PA6-GF15	BLACK SIML. RAL 9011	2	
				1	3pos. MCON 1.2 - Recepticle Hsg.	PA66-GF30	BLACK SIML. RAL 9011	1	

NOTES:

(1) AREA FOR PRINT

2 USABLE CONTACTS MCON 1.2 LL
SEE TE-NO. 1452674

3 MAX. WIRE SIZE RANGE 1.0 mm² FLR PERMITTED
FOR CAVITY-∅ 3.55MM
QUANTITY SEE WIRE HARNESS DRAWING
FOR PERMISSIBLE CURRENT CARRYING CAPACITY OF THE SINGLE CONTACT
SEE PRODUCT SPECIFICATION NO.108-18782

(4) SUPPLIER-MARK

(5) SPACE OF ACTIVITY

(6) SUPPLY CONDITION: CPA AND RETAINER IN PRELOCKED POSITION

(7) WARPAGE PERMITTED TO MAX. -0.5mm

(8) TE ORDER-NO.

9 ACCORDING TO INTERFACE DRAWING
SEE TE-NO. 114-18679-3

(9) VAR II: TEMERATURE RESISTANCE OF PLASTIC PARTS 150 °C

(10) VAR III: VERSION WITH 180° TURNED REC. HSG (F8)

(11) ASSEMBLY LINE SEGMENT IDENTIFICATION

(12) DATE CODE (DDDYY)

(13) DIVERGENT MARKING FOR PARTS FROM CHINESE, BRASIL AND U.S. PRODUCTION

CODING A AS SHOWN

3D VIEW
M 2:1

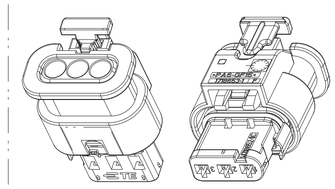

1:1 VIEW

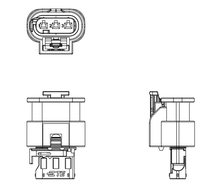

CODINGS
M 2:1

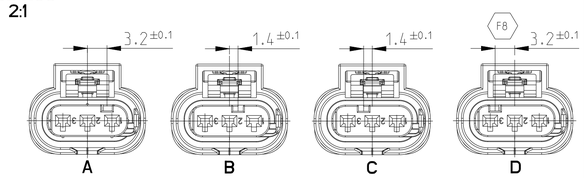

TOLERANCES UNLESS OTHERWISE SPECIFIED ACC. TO DIN 16901-140 CENTRIC TO NOMINAL DIMENSION. EDITION 1982-11 SHALL APPLY.
Freimasstoleranzen nach DIN 16901-140. Es gilt die Ausgabe 1982-11.

PRODUCT CHARACTERISTICS ACC. QMP EMEA_12
BESONDERE MERKMALE NACH QMP EMEA_12

THIS DRAWING IS A CONTROLLED DOCUMENT.

DIMENSIONS: mm

TOLERANCES UNLESS OTHERWISE SPECIFIED: 0 PLC ±; 1 PLC ±; 2 PLC ±; 3 PLC ±; 4 PLC ±; ANGLES ±2°

MATERIAL - -

FINISH - -

DWN 18OCT2004 C. L'Abbate
CHK 13JAN2005 A. Schroebel
APVD - J. Woller
PRODUCT SPEC 108-18969
APPLICATION SPEC 114-18861
WEIGHT 3 g

TE Connectivity

NAME 3pos. MCON 1.2 - LL Connector, Sealed - -

SIZE	CAGE CODE	DRAWING NO	RESTRICTED TO
A1	00779	C-1718644	-

CUSTOMER DRAWING

SCALE	SHEET	OF	REV
5:1	1	1	F11

4805 (3/11)