GENERAL TOLERANCE					
DIM. RANGE	0.5 - 3	> 3 - 6	> 6 - 30	> 30 - 120	> 120 - 400
TOLERANCE	±0.1	±0.1	±0.2	±0.3	±0.5

CUSTOMER DRAWING

REVISIONS		
REV	DESCRIPTION	DATE
D	ADD KEYWAY DESIGN ADD CODE NUMBER	2016-03-28
E	UPDATE TEMP. AND CABLE RANGE	2016-11-11
F	CHANGE WIDTH OF BUTTON SLOT	2017-03-24
G	UPDATE CABLE RANGE	2017-04-26

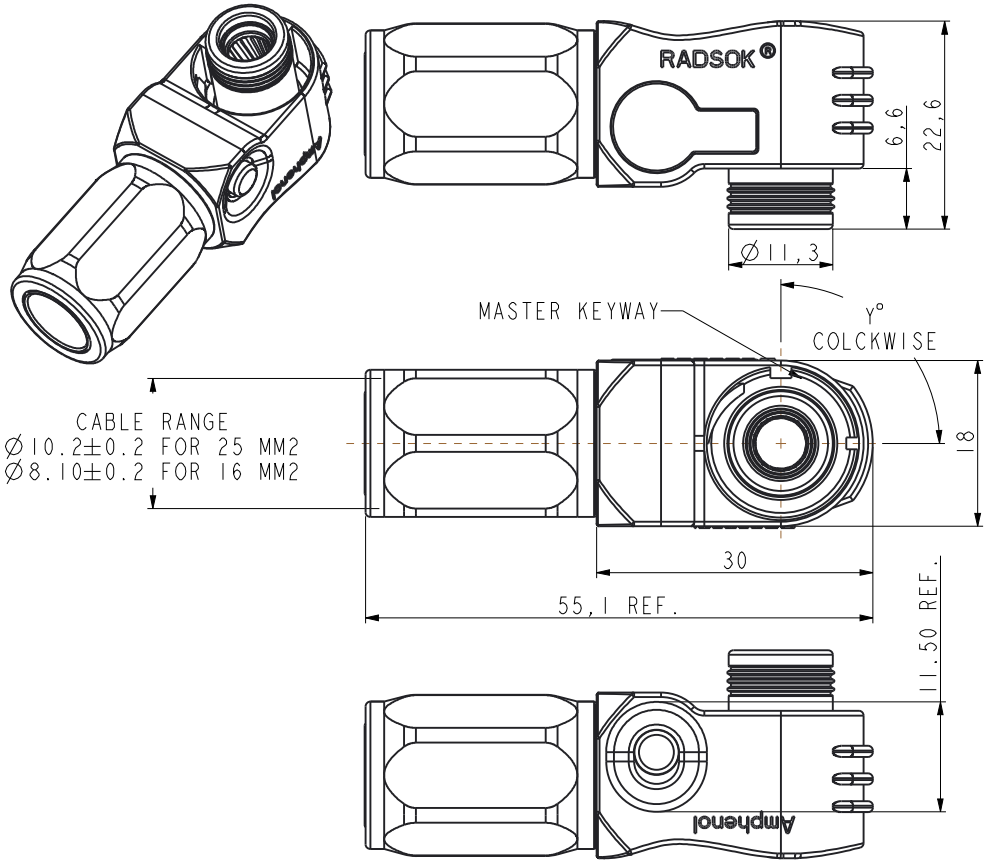

MFG PART NUMBER: C10-730186- ( ) ( ) ( ) ( )

- BASE NUMBER
- COLOR, SEE TABLE
- WIRE RANGE, SEE TABLE
- SEALING, SEE TABLE
- KEYWAY, SEE TABLE

CODE NUMBER REFERENCE: SLPPA ( ) B ( ) ( ) ( )

- BASE NUMBER
- WIRE RANGE, SEE TABLE
- WITH BACKSHELL
- SEALING, SEE TABLE
- COLOR, SEE TABLE
- KEYWAY, SEE TABLE

ITEM	DESCRIPTION	CODE NUMBER	MFG NUMBER
COLOR	ORANGE	0	0
	BLACK	B	1
	RED	R	2
WIRE RANGE	25 MM2 CRIMPING	25	0
	16 MM2 CRIMPING	16	3
SEALING	IP67(MATED)	S	0
	NO SEALING	N	1
KEYWAY (Y°)	NO KEYWAY	BLANK	BLANK
	90°	0	0
	180°	1	1
	60°	2	2
	120°	3	3
	150°	4	4

SPECIFICATIONS

CURRENT RATING	100A MAX FOR 16MM2 120A MAX FOR 25MM2
OPERATING VOLTAGE	1000V DC
OPERATING TEMPERATURE	-40°C-125°C
PROTECTION CLASS	IP67 (MATED)
PROTECTION	TOUCH PROOF

4. FOR ORDERING IMFORMATION, PLEASE SEE CODE NUMBER AND TABLE.
3. 16MM2 WIRE CRIMP PLUG USES THE SAME CRIMP DIE AS 25MM2, SUPPLIED WITH APRE-ASSEMBLED CRIMP REDUCER.
2. IF CHOOSE NO SEALING TYPE, THERE WILL BE NO O-RINGS AND GROMMET.
1. THE REFERENCED PRODUCT IS IN COMPLIANCE WITH THE MAXIMUM CONCENTRATION VALUES (MCVS) AS SET BY RoHS 2.0 DIRECTIVE 2011/65/EU AND ANNEX II AMENDMENT DIRECTIVE (EU)2015/863.

NOTES:

THIS DOCUMENT CONTAINS PROPRIETARY INFORMATION AND SUCH INFORMATION MAY NOT BE DISCLOSED TO OTHERS FOR ANY PURPOSE OR USED FOR MANUFACTURING PURPOSES WITHOUT WRITTEN PERMISSION FROM THE AMPHENOL CORP.

N/A
NEXT ASSEMBLY
METRIC DOCUMENT

PRO/ENGINEER INFORMATION
Pro/e Model Used: 10-730186-.00.ASSEM
Drawing Name: 10-730186.CUS

UNLESS OTHERWISE SPECIFIED
LINEAR DIMENSIONS ARE IN: **MILLIMETERS**
TOLERANCES:
ANGLES: ±2°
DEFAULT LINEAR TOLERANCES SEE TABLE
DIM.& TOL. PER ASME Y14.5M-1994;
DRM PER MIL-DTL-31000;
OTHER AMPHENOL STANDARDS: 9-9318
LEGENDS:
△ =FLAG NOTE CALL OUT
REFERENCE ONLY

SPECIFICATIONS
MATERIAL SPEC.
N/A
PROCESS SPEC.
N/A

POS	QTY	PART NUMBER	DESCRIPTION	NOTE

PARTS LIST

APPROVALS		DATE
PREPARED BY	SEVEN XIE	10-Mar-16
ENGINEER IN CHARGE	SEVEN XIE	
DESIGN MANAGER	ROB WENG	
DESIGN ACTIVITY GROUP	C&I	

THIRD ANGLE PROJECTION

AMPHENOL INDUSTRIAL OPERATIONS
Amphenol Technology(Zhuhai)Co.,Ltd
No.63, Xinghan Road, Sanzao Town, Jinwan, Zhuhai, PRC

5.7MM SURLOK PLUS RIGHTANGLE PLUG

SIZE	CAGE CODE	DOCUMENT NO.	REV.
C	77820	C10-730186-( )	G

SCALE: 1,0 | REF. | SHEET 1 OF 1

DOCUMENT NO. 10-730186-() | SHEET 1 OF 1 | REV. G

FORMAT: C-L-F-Rev.B