CUSTOMER DRAWING

PART NO. MG610278

GENERAL TOLERANCE (HOUSING)					USED ON
10MAX	20MAX	45MAX	ANGLE	ECCENT	
±0.2	±0.25	±0.3	±30'	0.1	

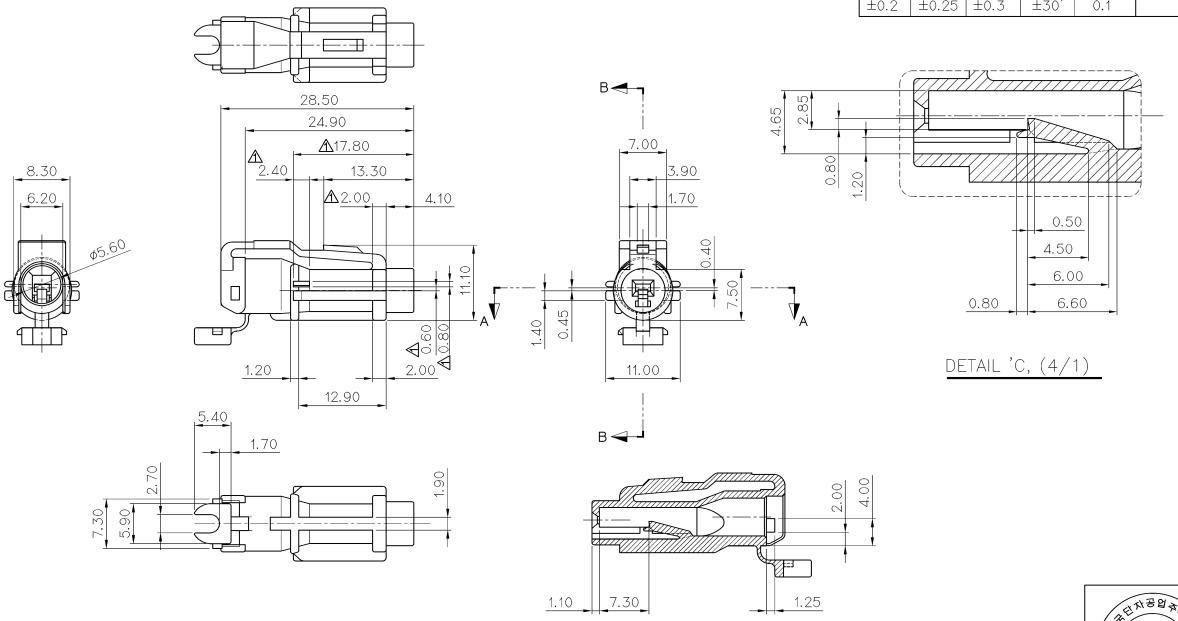

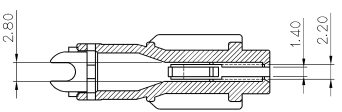

SECTION B-B

한국단자공업주식회사
출
2004. 09.13
도
연구개발1팀

ISSUE MARK

				MATERIAL	PBT
				FINISH	BLACK
				WIRE RANGE	
				INSULATION	
1	LOCK강도 보강 형상 변경	KDJ	2004.09.13		
LTR	REVISION RECORD	DR. / CHK.	APP. / DATE	TOLERANCE EXCEPT AS NOTED	SEE TABLE
DR.	RHO. 93.11.10	CHK.	6.07	SCALE	2/1
CHK.		APP.	6.15	PART NAME	SWP 1P PLUG HOUSING

KET ENGINEERED KOREA ELECTRIC TERMINAL CO., LTD.

CLASS

TYPE 7123-7454

PART NO. MG610278

(DIMENSIONS IN MM)